Structure & Functionality of Java Semaphore

Douglas C. Schmidt
d.schmidt@vanderbilt.edu
www.dre.vanderbilt.edu/~schmidt

Institute for Software Integrated Systems
Vanderbilt University
Nashville, Tennessee, USA

Learning Objectives in this Part of the Lesson

- Understand the concept of semaphores
- Be aware of the two types of semaphores
- Note a human known use of semaphores
- Recognize the structure & functionality of Java Semaphore

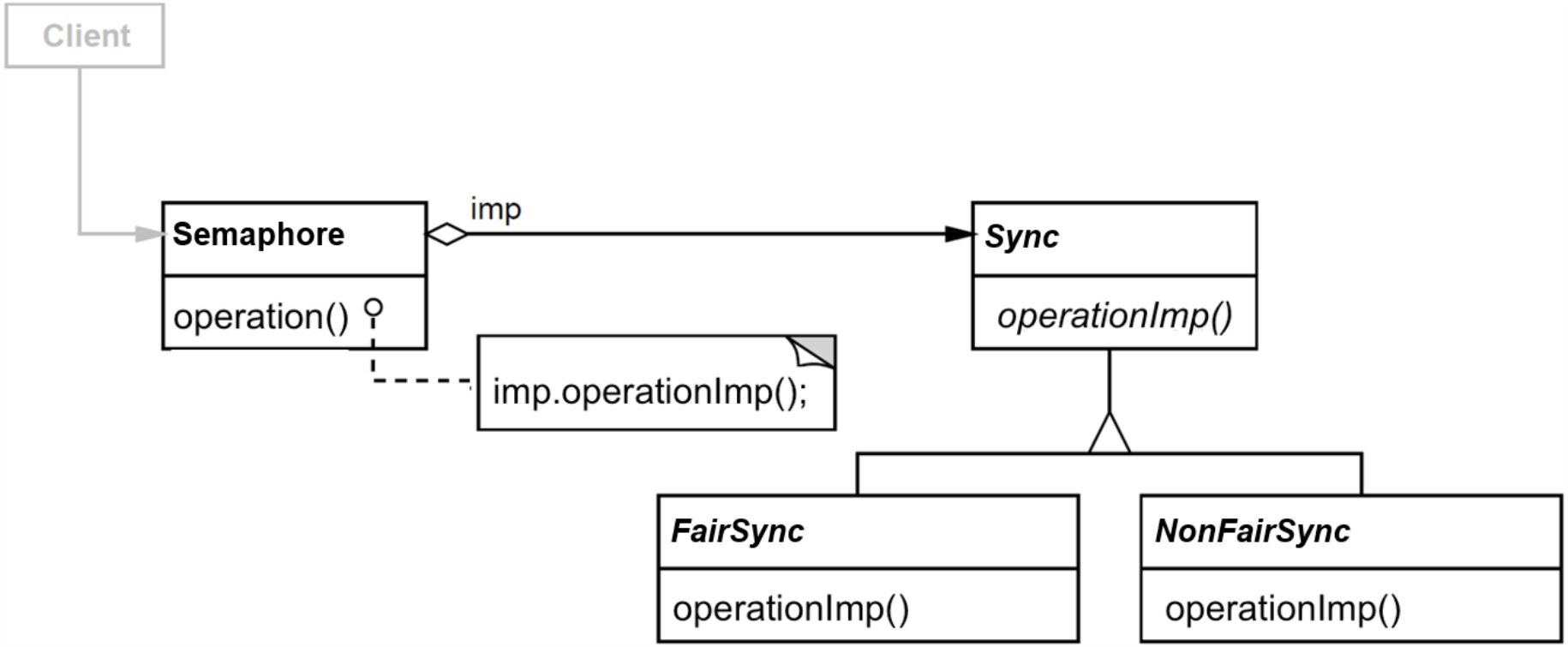

Overview of the Java Semaphore Class

Overview of the Java Semaphore Class

- Implements a variant of counting semaphores

```
public class Semaphore
                implements ... {
  ...
```

Class Semaphore

java.lang.Object
    java.util.concurrent.Semaphore

All Implemented Interfaces:

Serializable

```
public class Semaphore
extends Object
implements Serializable
```

A counting semaphore. Conceptually, a semaphore maintains a set of permits. Each `acquire()` blocks if necessary until a permit is available, and then takes it. Each `release()` adds a permit, potentially releasing a blocking acquirer. However, no actual permit objects are used; the `Semaphore` just keeps a count of the number available and acts accordingly.

Semaphores are often used to restrict the number of threads than can access some (physical or logical) resource. For example, here is a class that uses a semaphore to control access to a pool of items:

See docs.oracle.com/javase/8/docs/api/java/util/concurrent/Semaphore.html

Overview of the Java Semaphore Class

- Implements a variant of counting semaphores

```
public class Semaphore
                    implements ... {
  ...
```

Semaphore doesn't implement any synchronization-related interfaces

Class Semaphore

java.lang.Object
    java.util.concurrent.Semaphore

All Implemented Interfaces:

Serializable

```
public class Semaphore
extends Object
implements Serializable
```

A counting semaphore. Conceptually, a semaphore maintains a set of permits. Each `acquire()` blocks if necessary until a permit is available, and then takes it. Each `release()` adds a permit, potentially releasing a blocking acquirer. However, no actual permit objects are used; the `Semaphore` just keeps a count of the number available and acts accordingly.

Semaphores are often used to restrict the number of threads than can access some (physical or logical) resource. For example, here is a class that uses a semaphore to control access to a pool of items:

Overview of the Java Semaphore Class

- Constructors create semaphore with a given # of permits

```
public class Semaphore
              implements ... {
  ...
  public Semaphore
               (int permits) {
    ...
  }

  public Semaphore
              (int permits,
               boolean fair) {
    ...
  }
  ...
```

Overview of the Java Semaphore Class

- Constructors create semaphore with a given # of permits
  - This # is *not* a maximum, it's just an initial value

```
public class Semaphore
                 implements ... {
   ...
   public Semaphore
                 (int permits) {
      ...
   }

   public Semaphore
                (int permits,
                 boolean fair) {
      ...
   }
   ...
```

See stackoverflow.com/questions/7554839/how-and-why-can-a-semaphore-give-out-more-permits-than-it-was-initialized-with

Overview of the Java Semaphore Class

- Constructors create semaphore with a given # of permits
  - This # is *not* a maximum, it's just an initial value
  - The initial permit value can be negative!!

```
public class Semaphore
                 implements ... {
   ...

Semaphore s = new Semaphore(-1);
...
```

In this case, all threads will block trying to acquire the semaphore until some thread(s) increment the permit value until it's positive

Overview of the Java Semaphore Class

- Applies the *Bridge* pattern

```
public class Semaphore
                 implements ... {
    ...
```

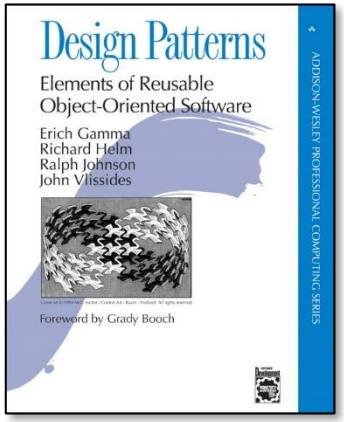

Decouples an interface from its implementation(s) so fair & non-fair semantics can be supported uniformly

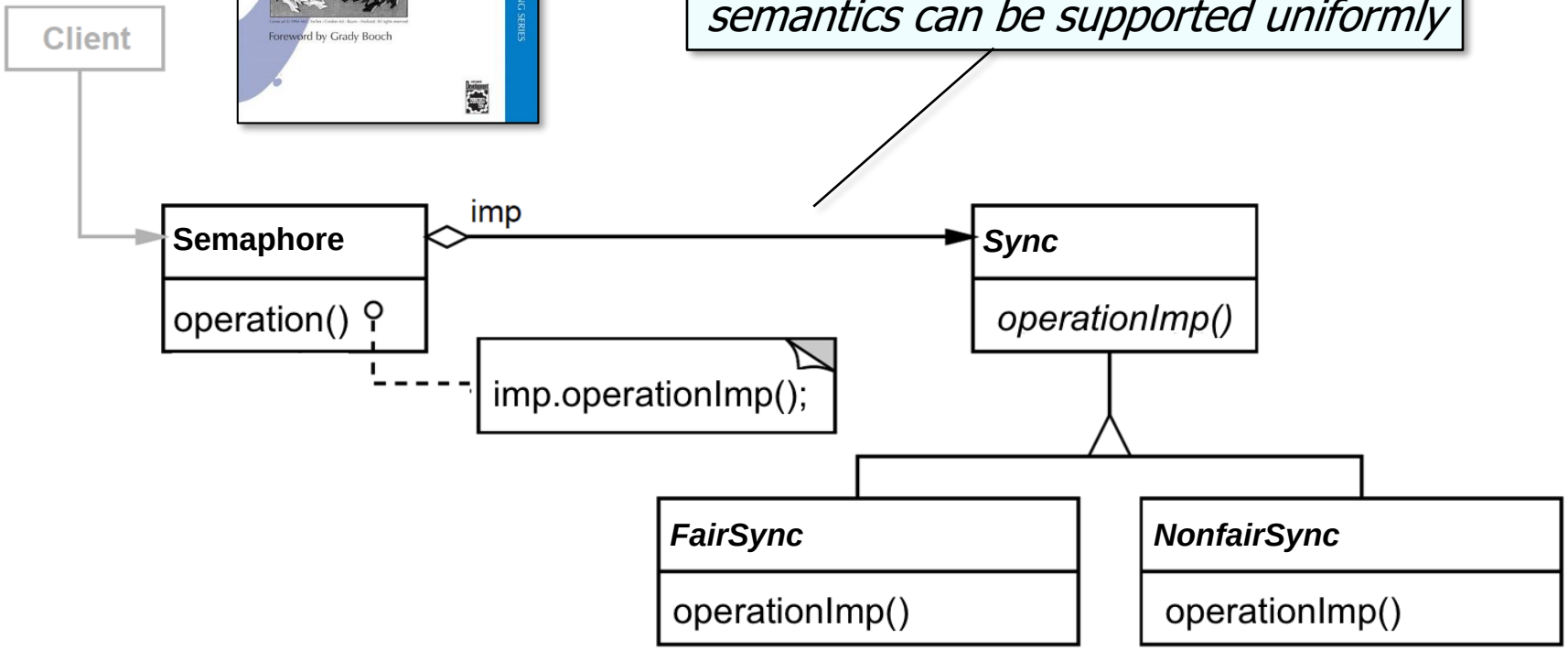

See en.wikipedia.org/wiki/Bridge_pattern

Overview of the Java Semaphore Class

- Applies the *Bridge* pattern
  - Locking handled by Sync Implementor hierarchy

```
public class Semaphore
             implements ... {
  ...
  /** Performs sync mechanics */
  private final Sync sync;
```

Overview of the Java Semaphore Class

- Applies the *Bridge* pattern
  - Locking handled by Sync Implementor hierarchy
    - Inherits functionality from AbstractQueuedSynchronizer

```
public class Semaphore
                implements ... {
  ...
  /** Performs sync mechanics */
  private final Sync sync;

  /** Sync implementation for
      semaphore */
  abstract static class
      Sync extends
      AbstractQueuedSynchronizer {
      ...
  }
```

See docs.oracle.com/javase/8/docs/api/java/util/concurrent/locks/AbstractQueuedSynchronizer.html

Overview of the Java Semaphore Class

- Applies the *Bridge* pattern
  - Locking handled by Sync Implementor hierarchy
    - Inherits functionality from AbstractQueuedSynchronizer
      - Many Java synchronizers based on FIFO wait queues use this framework

```
public class Semaphore
                implements ... {
  ...
  /** Performs sync mechanics */
  private final Sync sync;

  /** Sync implementation for
      semaphore */
  abstract static class
      Sync extends
      AbstractQueuedSynchronizer {
      ...
  }
```

See gee.cs.oswego.edu/dl/papers/aqs.pdf

Overview of the Java Semaphore Class

- Applies the *Bridge* pattern
  - Locking handled by Sync Implementor hierarchy
    - Inherits functionality from AbstractQueuedSynchronizer
    - Defines NonfairSync & FairSync subclasses with non-FIFO & FIFO semantics

```
public class Semaphore
                implements ... {
  ...
  /** Performs sync mechanics */
  private final Sync sync;

  /** Sync implementation for
      semaphore */
  abstract static class
      Sync extends
      AbstractQueuedSynchronizer {
      ...
  }

  static final class NonfairSync
    extends Sync { ... }

  static final class FairSync
    extends Sync { ... }
```

See src/share/classes/java/util/concurrent/Semaphore.java

Overview of the Java Semaphore Class

- Applies the *Bridge* pattern
  - Locking handled by Sync Implementor hierarchy
  - Constructor enables fair vs. non-fair semaphore acquisition model

```
public class Semaphore
                implements ... {
  ...
  public Semaphore
                (int permits,
                 boolean fair) {
    sync = fair
      ? new FairSync(permits)
      : new NonfairSync(permits);
  }
  ...
```

This param determines whether FairSync or NonfairSync is used

Overview of the Java Semaphore Class

- Applies the *Bridge* pattern
  - Locking handled by Sync Implementor hierarchy
  - Constructor enables fair vs. non-fair semaphore acquisition model
    - These models apply the same pattern used by ReetrantLock

```
public class Semaphore
                implements ... {
  ...
  public Semaphore
                (int permits,
                 boolean fair) {
    sync = fair
      ? new FairSync(permits)
      : new NonfairSync(permits);
  }
  ...
```

See earlier lesson on "*Java ReentrantLock*"

Overview of the Java Semaphore Class

- Applies the *Bridge* pattern
  - Locking handled by Sync Implementor hierarchy
  - Constructor enables fair vs. non-fair semaphore acquisition model
    - These models apply the same pattern used by ReetrantLock

```
public class Semaphore
                implements ... {
  ...
  public Semaphore
                (int permits,
                 boolean fair) {
    sync = fair
      ? new FairSync(permits)
      : new NonfairSync(permits);
  }
  ...
```

Ensures strict "FIFO" fairness, at the expense of performance

Overview of the Java Semaphore Class

- Applies the *Bridge* pattern
  - Locking handled by Sync Implementor hierarchy
  - Constructor enables fair vs. non-fair semaphore acquisition model
    - These models apply the same pattern used by ReetrantLock

```
public class Semaphore
                implements ... {
  ...
  public Semaphore
                (int permits,
                 boolean fair) {
    sync = fair
      ? new FairSync(permits)
      : new NonfairSync(permits);
  }
  ...
```

Enables faster performance at the expense of fairness

Overview of the Java Semaphore Class

- Applies the *Bridge* pattern
  - Locking handled by Sync Implementor hierarchy
  - Constructor enables fair vs. non-fair semaphore acquisition model
    - These models apply the same pattern used by ReetrantLock

```
public class Semaphore
                implements ... {
  ...
  public Semaphore
                (int permits,
                 boolean fair) {
    sync = fair
      ? new FairSync(permits)
      : new NonfairSync(permits);
  }

  public Semaphore
                 (int permits) {
    sync = new
      NonfairSync(permits);
  }
  ...
```

The default behavior favors performance over fairness

Overview of the Java Semaphore Class

- Applies the *Bridge* pattern
  - Locking handled by Sync Implementor hierarchy
  - Constructor enables fair vs. non-fair semaphore acquisition model
    - These models apply the same pattern used by ReetrantLock

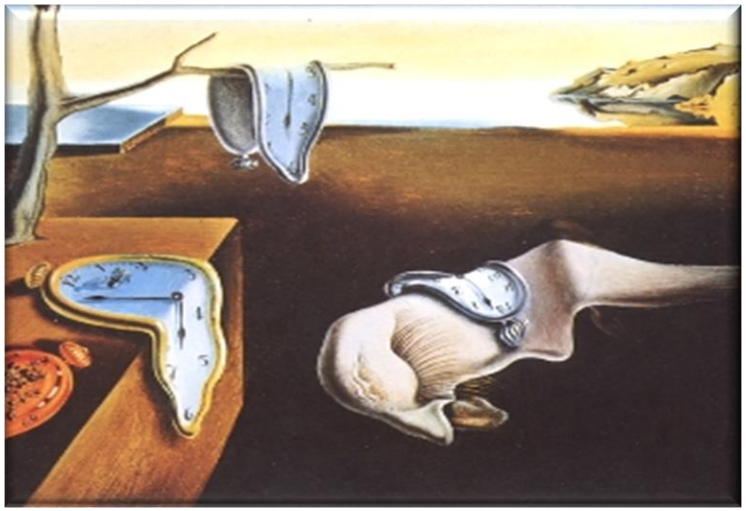

```
public class Semaphore
                 implements ... {
  ...
  public Semaphore
                 (int permits,
                  boolean fair) {
    sync = fair
      ? new FairSync(permits)
      : new NonfairSync(permits);
  }

  public Semaphore
                  (int permits) {
    sync = new
      NonfairSync(permits);
  }
  ...
```

FairSync is generally much slower than NonfairSync, so use it accordingly

Overview of the Java Semaphore Class

- Acquiring & releasing permits from/to a semaphore need not be "fully bracketed"
  - i.e., a thread that acquires a semaphore need not be the one that releases it

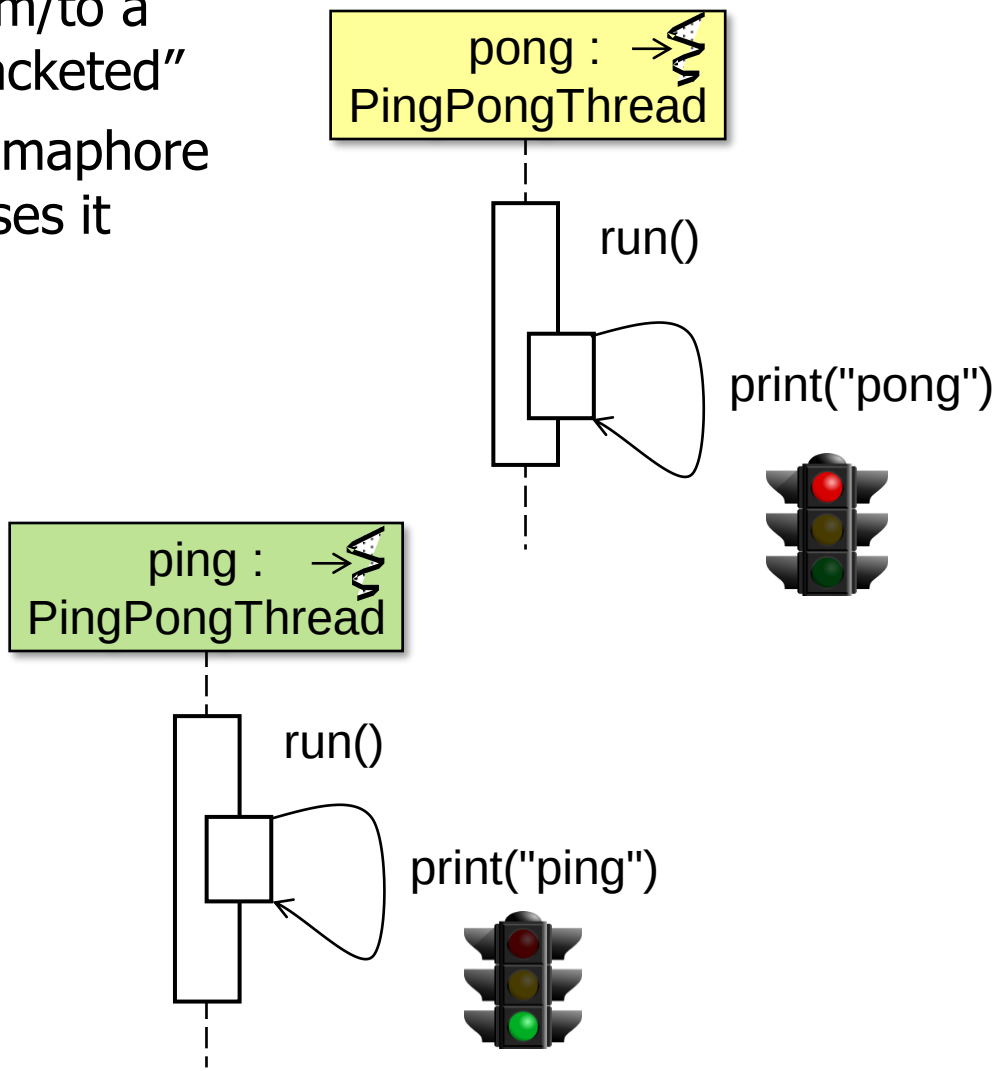

See example in upcoming part on "*Java Semaphore: Coordinating Threads*"

End of Structure & Functionality of Java Semaphore